© COPYRIGHT OF THIS DRAWING IS RESERVED BY DBFL CONSULTING ENGINEERS. NO PART SHALL BE REPRODUCED OR TRANSMITTED WITHOUT THEIR WRITTEN PERMISSION.

ON ORIGINAL

0 5 10 15 20 25 30 40 50mm

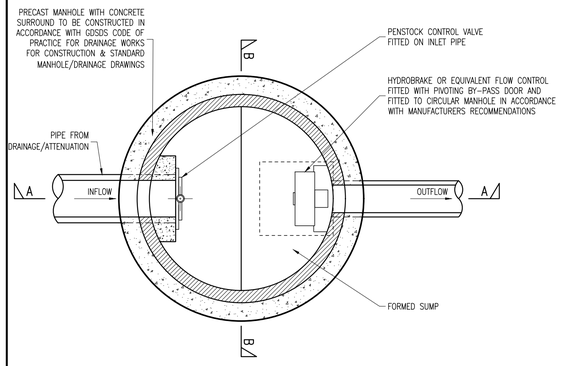

PLAN

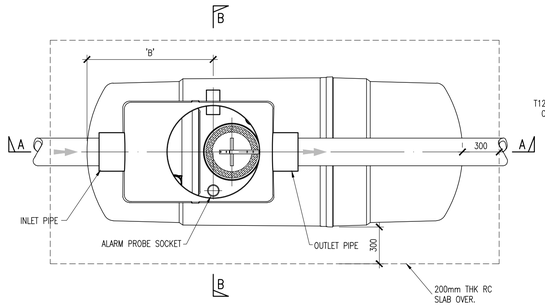

PLAN

DIMENSIONS

UNIT REF No.	NOMINAL FLOW	DIM 'A'	DIM 'B'	STD. PIPEø
NSBE015	15 L/S	3893	1220	375

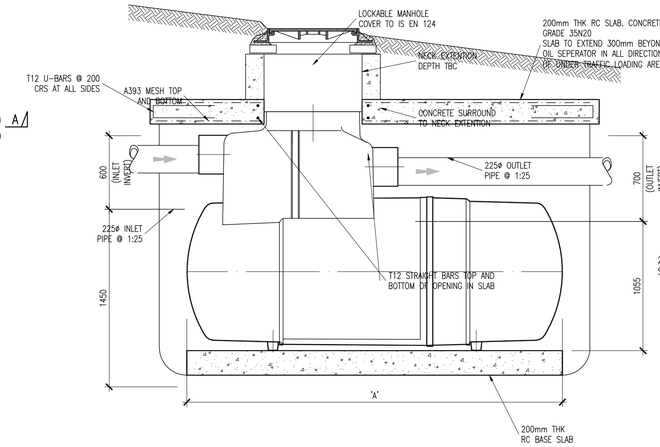

SECTION A–A

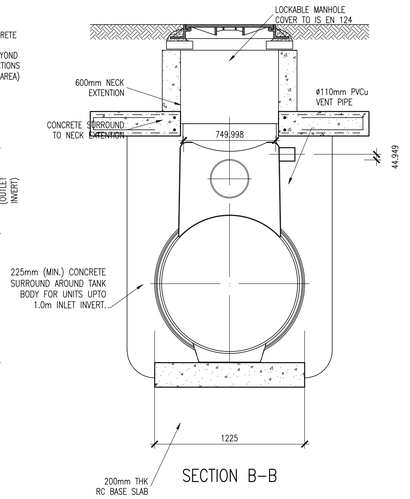

SECTION B–B

BYPASS INTERCEPTOR DETAIL

SCALE 1:25

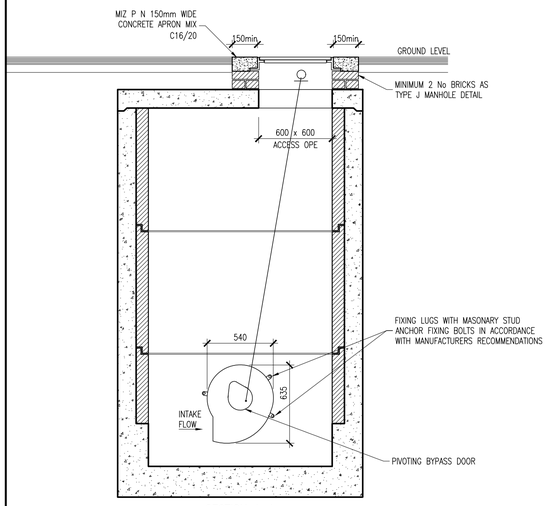

SECTION A–A

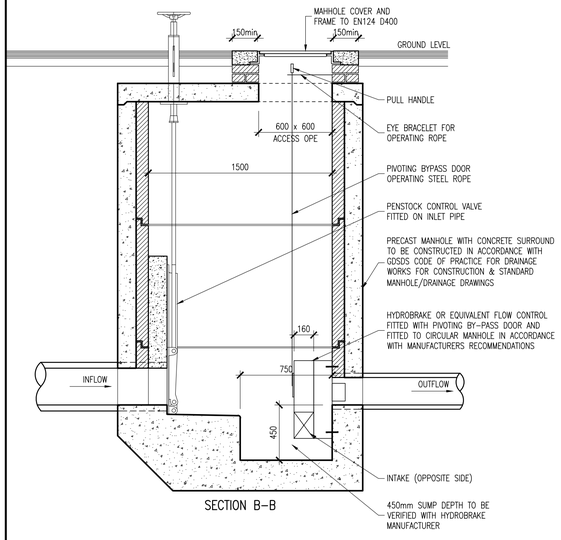

SECTION B–B

FLOW CONTROL MANHOLE DETAIL

SCALE 1:25

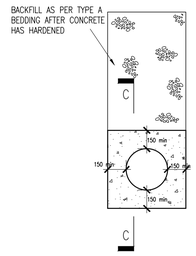

RIGID PIPES : SURROUND

CONCRETE BEDDING
TO BE USED WHERE COVER LESS THAN 1.2m AND / OR AS DIRECTED BY THE ENGINEER (REFER TO LONGITUDINAL SECTIONS)

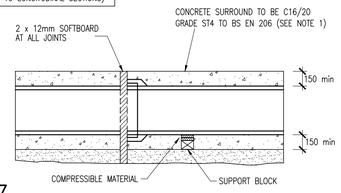

SECTION C – C

TYPE Z
CONCRETE BEDDING/SURROUND
(COVER 750mm – 1200mm)

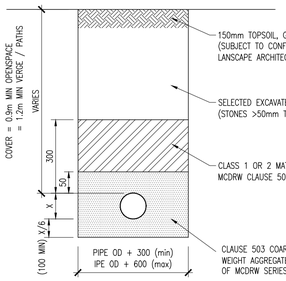

A – BEDDING/BACKFILL DETAIL
ACROSS OPEN SPACE (SIMILAR)

PIPE OD = PIPE OVERALL DIMENSION

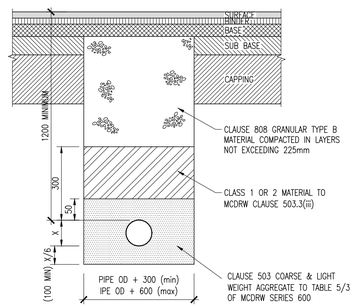

B – BEDDING/BACKFILL DETAIL
IN ROADWAYS/VERGES/PATHS

C – TRENCH BACKFILL/REINSTATEMENT DETAIL
IN EXISTING ROADS

NOTES:

1. ALL DIMENSIONS ARE IN MILLIMETRES.
2. DIMENSION X IS THE EXTERNAL DIAMETER OF THE PIPE (ø225 = 301mm, ø450 = 588mm & WIDER AT SOCKETS).
3. THE MINIMUM AND MAXIMUM WIDTH OF THE TRENCH APPLIES ON AND BELOW A LINE 300mm ABOVE THE OUTSIDE TOP OF THE PIPE. ABOVE THE 300mm LINE THE TRENCH BACKFILL MATERIAL SHALL BE AS PER TYPICAL TRENCH DETAILS.
4. BEDDING TO BE COMPACTED IN ACCORDANCE WITH SPECIFICATION & MANUFACTURERS RECOMMENDATIONS

TYPE S
(COVER> 1.2 METRES TO CROWN)

PIPE BEDDING DETAILS

SCALE 1:25

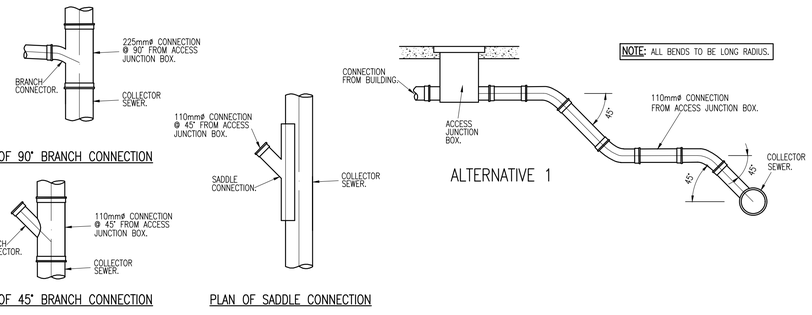

PLAN OF 90° BRANCH CONNECTION

PLAN OF 45° BRANCH CONNECTION

PLAN OF SADDLE CONNECTION

ALTERNATIVE 1

PIPE CONNECTION DETAILS

NTS

JOINT BOX DIMENSIONS			
BOX	L	W	D
JB1	305	305	610
JB4	1110	660	800
JB4A	1150	915	915

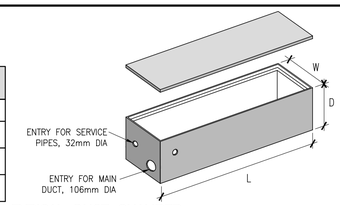

TYPICAL DUCT CHAMBER
SCALE 1:25

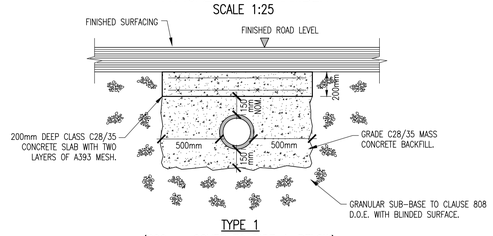

TYPE 1
(600mm COVER TO PIPE & BELOW)

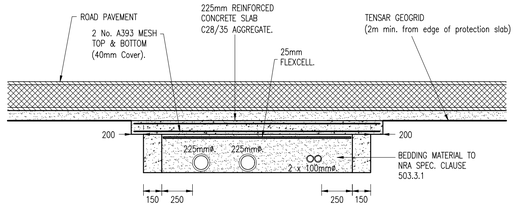

TYPE 2
(600mm COVER TO PIPE & BELOW)

TYPICAL SERVICES PROTECTION DETAIL

NOTES:

GENERAL NOTES:

1. ALL SURFACE WATER MANHOLES AND DRAINAGE ARE TO BE CONSTRUCTED IN ACCORDANCE WITH THE REQUIREMENTS OF THE GREATER DUBLIN CODE OF PRACTICE FOR DRAINAGE WORKS.
2. ALL FOUL DRAINAGE WORKS TO BE IN ACCORDANCE WITH IRISH WATERS' CODE OF PRACTICE FOR WASTEWATER SUPPLY AND WASTEWATER INFRASTRUCTURE STANDARD DETAILS.
3. SURFACES FINISHES FOR CONCRETE:
   3.1. CLASS F1 FOR ALL CONCRETE 100mm OR MORE BELOW GROUND LEVEL.
   3.2. CLASS F3 FOR ALL EXPOSED CONCRETE ABOVE 100mm BELOW GROUND LEVEL.
4. ALL EXPOSED CORNERS ON CONCRETE SHALL BE CHAMFERED WITH 25mm x 25mm CHAMFERS.
5. ALL STRUCTURAL CONCRETE (HEADWALLS, RC MANHOLES, PETROL INTERCEPTOR SLABS) TO RECEIVE MC DUR 1680 (OR SIMILAR APPROVED TAR MODIFIED EPOXY RESIN) TO ALL BURIED SURFACES. TO FINISH 100mm BELOW GROUND LEVEL.
6. ALL SEWERS SHALL BE PRESSURE TESTED PRIOR TO BACKFILLING.
7. TYPE 1 GRANULAR MATERIAL : BROKEN STONE OR GRAVEL TO PASS 10mm SIEVE AND BE RETAINED ON 5mm SIEVE. TYPE 2 GRANULAR MATERIAL :BROKEN STONEOR GRAVEL TO PASS 10mm – 25mm SIEVE, ACCORDING TO PIPE SIZE, (SEE TABLE) AND BE RETAINED ON 5mm SIEVE.
8. TYPE 3 SELECTED FILL : UNIFORM READILY COMPACTED MATERIAL FREE FROM TREE ROOTS, VEGETABLE MATTER,BUILDING DEBRIS, AND FROZEN SOIL AND EXCLUDING CLAY LUMPS RETAINED ON A 75mm SIEVE AND STONES RETAINED ON A 37.5mm SIEVE.
7. ALL LADDERS, RUNGS, SAFETY CHAINS etc SHALL BE HOT DIPPED GALVANISED TO BS 729 OR EQUIVALENT.

rev	date	description	by	chkd.
P01	15-03-21	APB APPLICATION	JJB	SB

client approval
- A - Approved
- B - Approved with comments
- C - Do not use

suitability: S2 - INFORMATION
issue purpose: PLANNING

DBFL Consulting Engineers
Civil, Structural & Transportation Engineering
www.dbfl.ie

DUBLIN OFFICE: Ormond House, Upper Ormond Quay, Dublin 7, D07 W704
PHONE +353 1 400 4000

CORK OFFICE: Phoenix House, Monahan Road, Cork, T12 H1XY
PHONE +353 (0) 21 2024538

WATERFORD OFFICE: Suite 8b The Atrium, Maritana Gate, Canada Street, Waterford, X91 W628
PHONE +353 51 309 500

project ref.
WHITE PINES EAST ,
RATHFARNHAM, DUBLIN 16

drawing title
TYPICAL DRAINAGE DETAILS SHEET 2

client
ARDSTONE HOMES LTD

designed by	author	scale	sheet size
SB	JJB	AS NOTED	A1

drawing no. 190230-DBFL-CS-SP-DR-C-5011
revision P01